ROYAL 186 ESS-0.125-GR-L/OR

CODE NUMBER

3452668

DESCRIPTION

0.125 gpf, Graphite Finish, Fixture Connection Top Spud, Single Flush, 3/4" Control Stop, Less Override, Hardwired, Sensor-Operated, 24V, Royal® Exposed Sensor Hardwired Urinal Flushometer.

DETAILS

- Flush Volume: 0.125 gpf (0.5 Lpf)
- Finish: Graphite (GR)
- Power Type: Hardwired
- Valve: Diaphragm
- Valve Body Material: Semi-red Brass
- Fixture Type: Urinal
- Fixture Connection: Top Spud
- Rough-In Dimension: 11 ½" (292mm)
- Spud Coupling: ¾" (19mm)
- Supply Pipe: ¾" (19mm)
- Override: Less (L/OR)
- Control Stop: 3/4"
- Voltage: 24V

FEATURES

Quiet, Exposed, Dual Filtered Diaphragm Assembly, Chrome Plated Urinal

- Sweat Solder Adapter w/Cover Tube and Cast Wall Flange w/Set Screw
- OPTIMA® EL-1500 Self-Adaptive Infrared Sensor with Indicator Light
- Non-Hold-Open Integral Solenoid Operator, Fixed Metering Bypass and No External Volume Adjustment to Ensure Water Conservation
- High Back Pressure Vacuum Breaker Flush Connection with One-Piece Bottom Hex Coupling Nut, Spud Coupling and Flange for 3⁄4” Top Spud
- Stop Seat and Vacuum Breaker molded from PERMEX® Rubber Compound for Chloramine Resistance
- 3⁄4” I.P.S. Screwdriver Bak-Chek® Angle Stop with Vandal Resistant Stop Cap
- Infrared Sensor with Multiple-focused, Lobular Sensing Fields for high and low target detection

VIDEOS

- ESS Flushometer
- PVD Special Finishes

COMPLIANCES & CERTIFICATIONS

(ADA Compliant, BAA Compliant, BABAA Compliant, cUPC Green Certified, cUPC Certified, UL Certified, UPC Certified, WaterSense Listed, Satisfies LEED Credits)

RECOMMENDED SPECIFICATION

Valve Body, Cover, Tailpiece and Control Stop shall be in conformance with ASTM Alloy Classification for Semi- Red Brass. Valve shall be in compliance with the applicable sections of ASSE 1037 and ANSI/ASME 112.19.2. Valve Body, Cover, Tailpiece and Control Stop shall have a PVD Graphite finish.

ELECTRICAL SPECIFICATIONS

- Arming Delay: 8 seconds
- Control Circuit: Solid State/24 VAC Input/24 VAC Output
- Flush Delay: 1s
- Self-Adaptive Window: ±8
- Sensor Range: 15"–30" (381–762mm)
- Solenoid Operator: 24 VAC
- Transformers (specify separately):
  - 0345154
  - 0345999

VALVE OPERATING PRESSURE (FLOWING)

15–80 PSI (103–552 kPa). Specific fixtures may require greater minimum flowing pressure - consult manufacturer requirements.

DOWNLOADS

- Royal ESS TMO Installation Instructions
- Royal ESS Concealed and Exposed Installation Instructions
- Control Stop Repair and Maintenance Guide
- Flush Connections Flanges Repair and Maintenance Guide
- Tail Piece Repair and Maintenance Guide

Sloan 10500 Seymour Ave, Franklin Park, IL 60131
Phone: 800.982.5839 • Fax: 800.447.8329 • sloan.com

- Optima ESS Repair and Maintenance Guide
- Flushometer Pressure gauges
- Additional Downloads

NOTES

All information contained within this document subject to change without notice.

Looking for other variations of the ROYAL 186 ESS product? View the general spec sheet with all options.

WaterSense compliant when used with a WaterSense compliant fixture

WARRANTY

View Warranty Information

ROUGH-IN

186

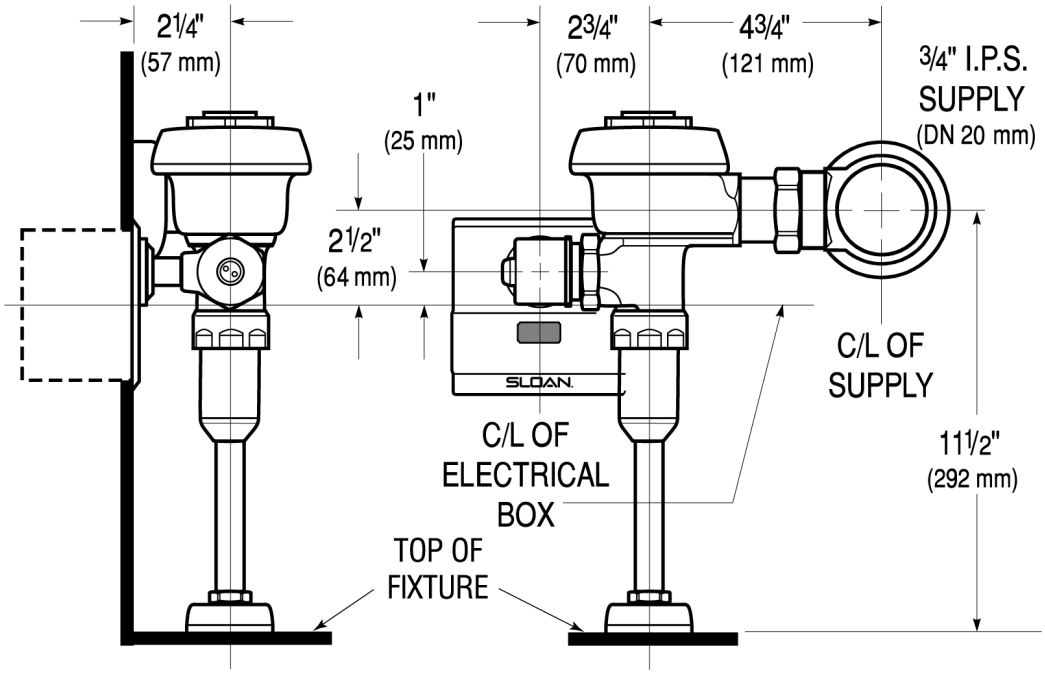

Sloan 10500 Seymour Ave, Franklin Park, IL 60131
Phone: 800.982.5839 • Fax: 800.447.8329 • sloan.com